ALT70 Tacklight Installation Instructions (Projection illuminated imaging system)
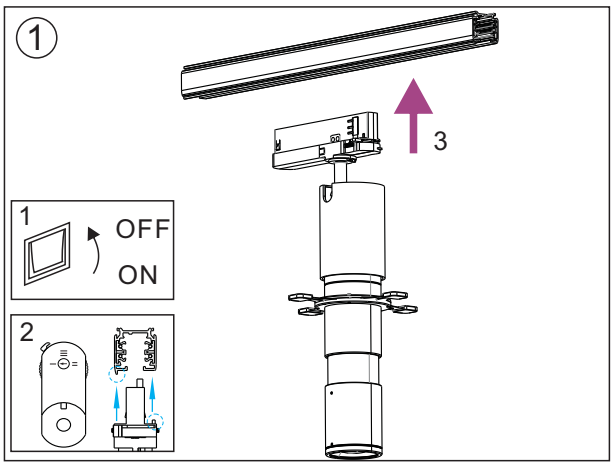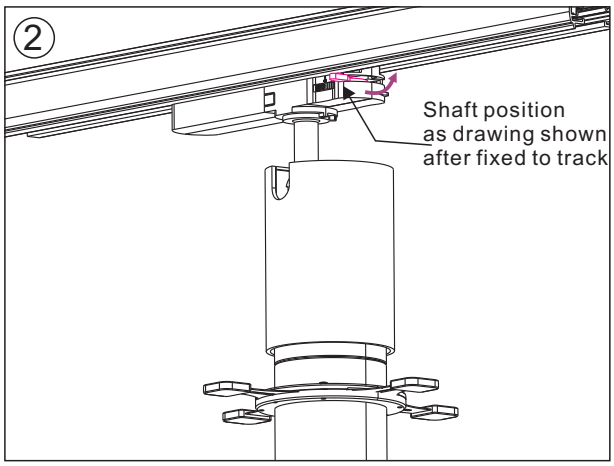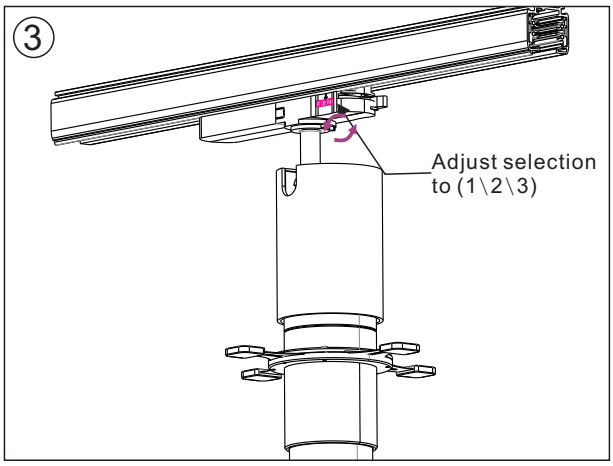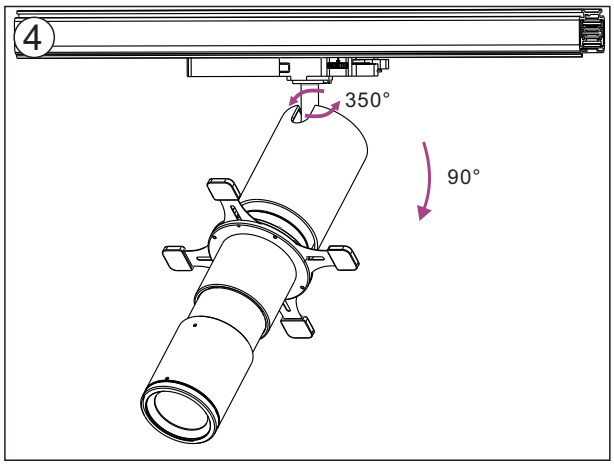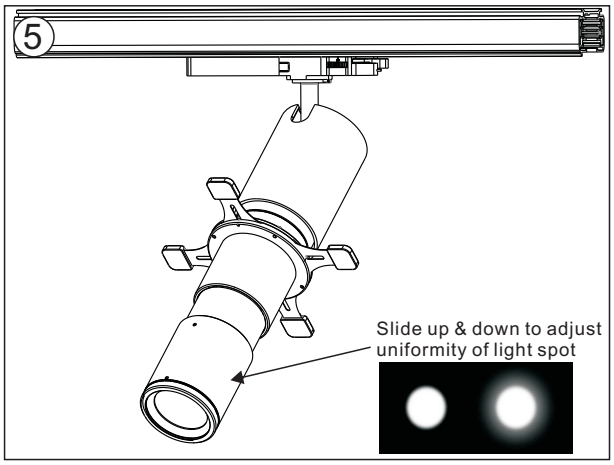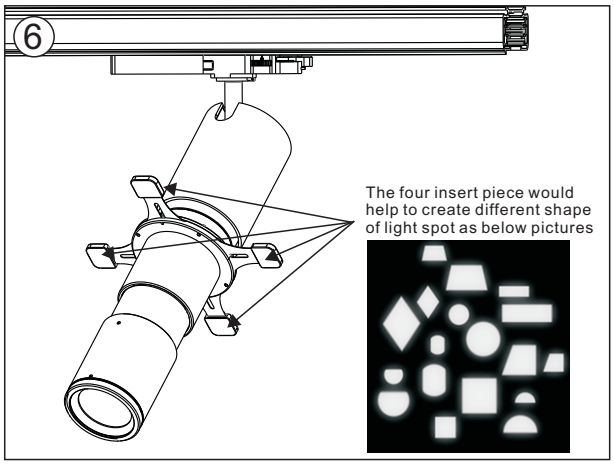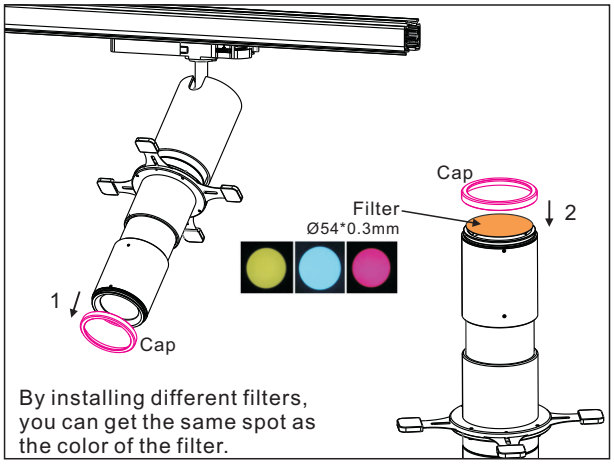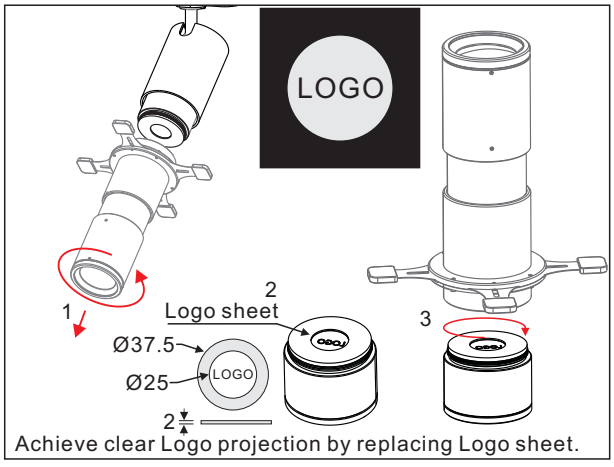
Adaptor installation diagram